victron energy
BLUE POWER

LINK BOX WIRING INSTRUCTIONS

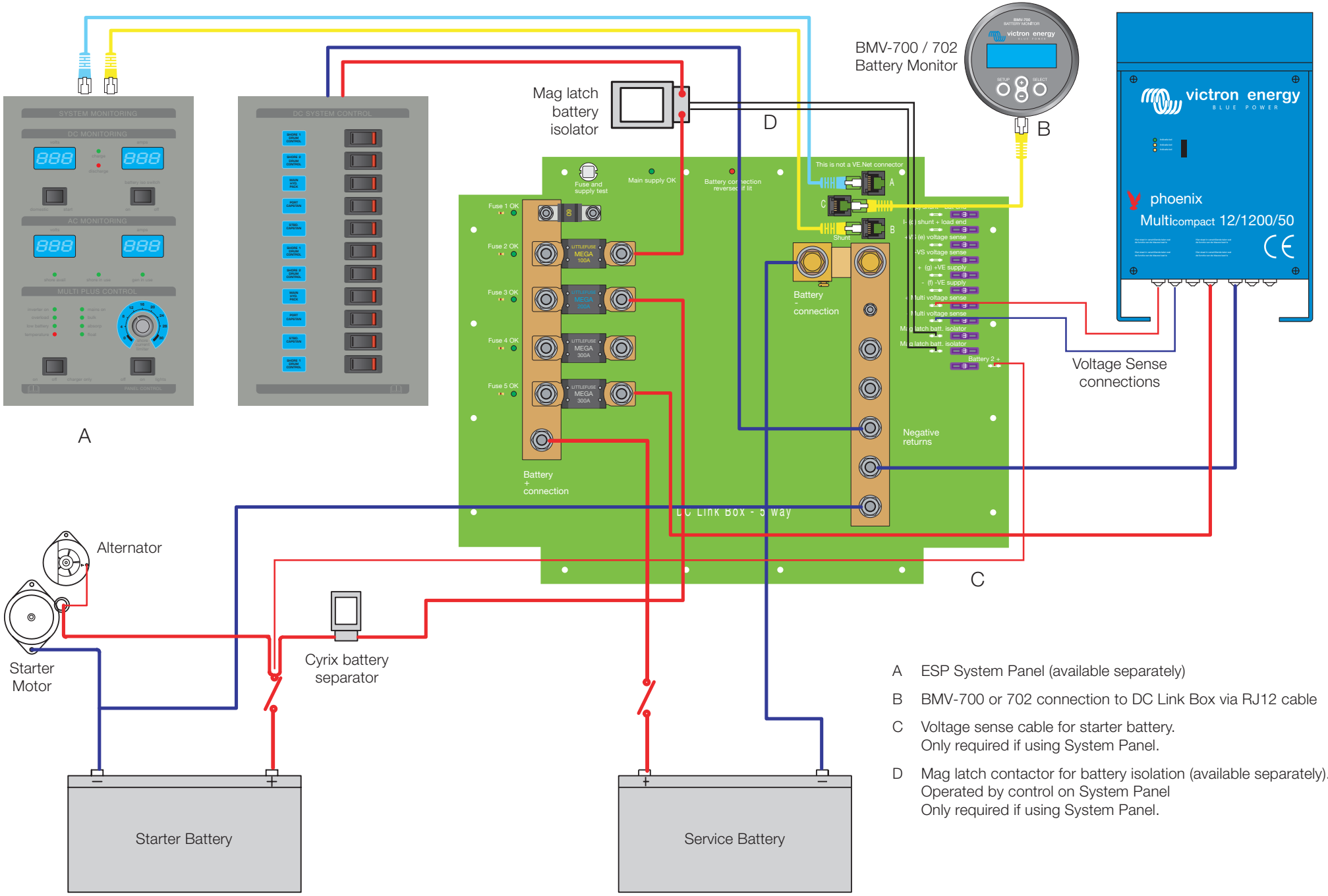

A ESP System Panel (available separately)

B BMV-700 or 702 connection to DC Link Box via RJ12 cable

C Voltage sense cable for starter battery.
Only required if using System Panel.

D Mag latch contactor for battery isolation (available separately).
Operated by control on System Panel
Only required if using System Panel.