ENERGY SOLUTIONS

# Waterworld – 10 kW Pure Electric system (up to 10m - 7.5 tons)

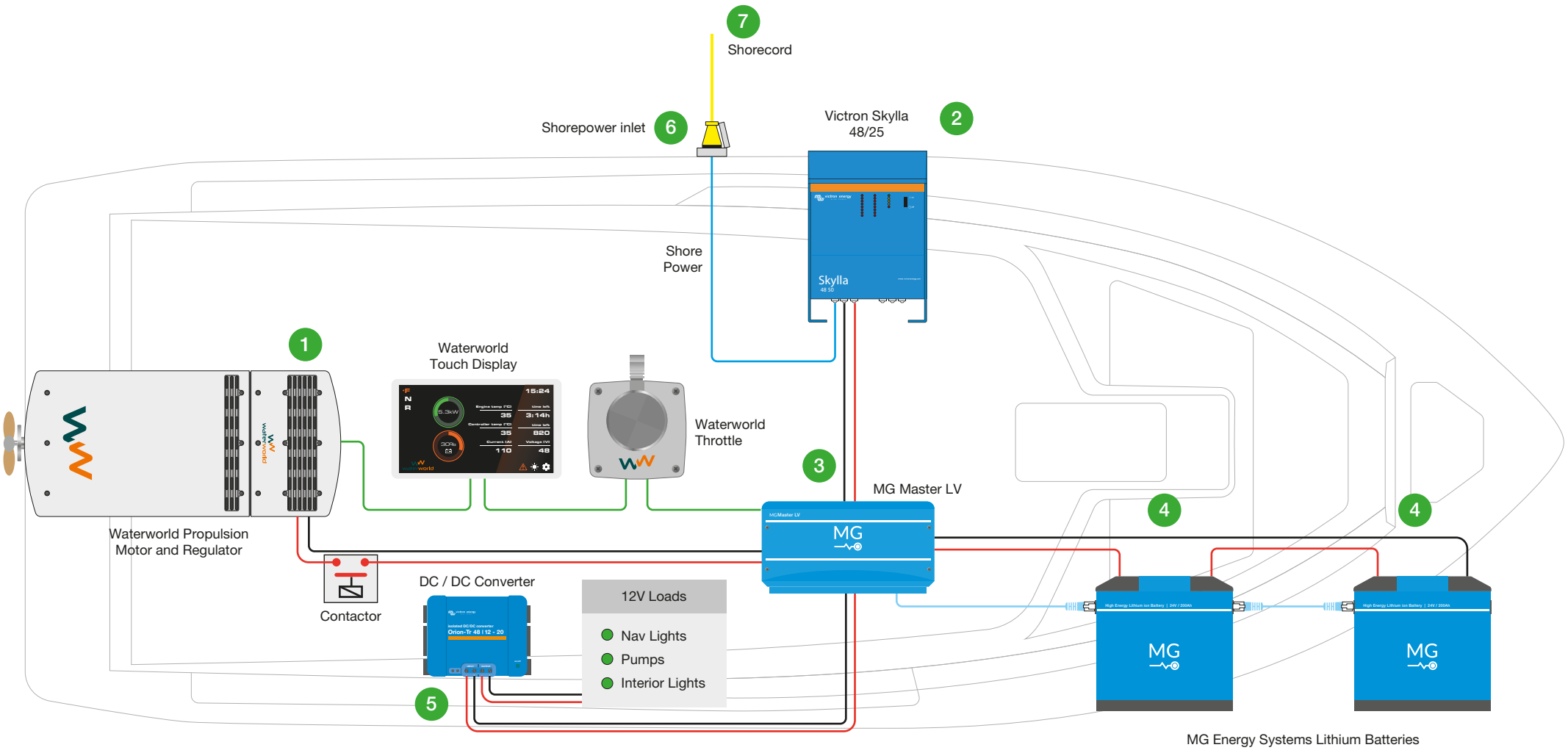


ENERGY SOLUTIONS 52 – 54 Riverside, Medway City Estate, Rochester, Kent ME2 4DP UK
tel: +44 (0)1634 290772 email: sales@energy-solutions.co.uk web: www.energy-solutions.co.uk

System Voltages: 12V and 48V systems
Applications: Marine, Sail Yacht, Inland Waterways, Day Boat

Drawing Number:
20-1002

| Quote Q-47492 | | | Waterworld – 10 kW Pure Electric system (up to 10m - 7.5 tons) | |
|---|---|---|---|---|
| Item on drawing | Line | ES Part Number | Description | Note |
| 1 | 001 | WW-3-10.0I | Waterworld '3' electric propulsion 10kw - complete system | Inc. motor, controller, display, throttle & contactor |
| 2 | 002 | SKYLLA 48/025 | Victron Skylla 48 volt 25 amp battery charger | |
| 3 | 003 | BAT-LI-MG-BMS-RJ-24/0400 | MG Energy Systems Low Voltage Master BMS | |
| 4 | 004 | BAT-LI-MG-HE-RJ-26V-200 | MG Energy Systems Lithium Ion HE Battery 200 Ah @ 26.4 V (5 kWh) | |
| 5 | 005 | ORION-IG-48/12-20A-240W | Victron Orion DC-DC Converter - 48v input (32-70v) | |
| 6 | 012 | API-RATIO-2PE/16/240/SS | Ratio Stainless steel shorepower inlet. 2P+E. 240v 16 A | |
| 7 | 013 | SHORECORDRATIO-16A/15M | Shorecord Set - 3 core - 16A - 15m | |

ENERGY SOLUTIONS

52 – 54 Riverside, Medway City Estate, Rochester, Kent ME2 4DP tel: 01634 290772 email: sales@energy-solutions.co.uk web: energy-solutions.co.uk