## SYSTEM OVERVIEW

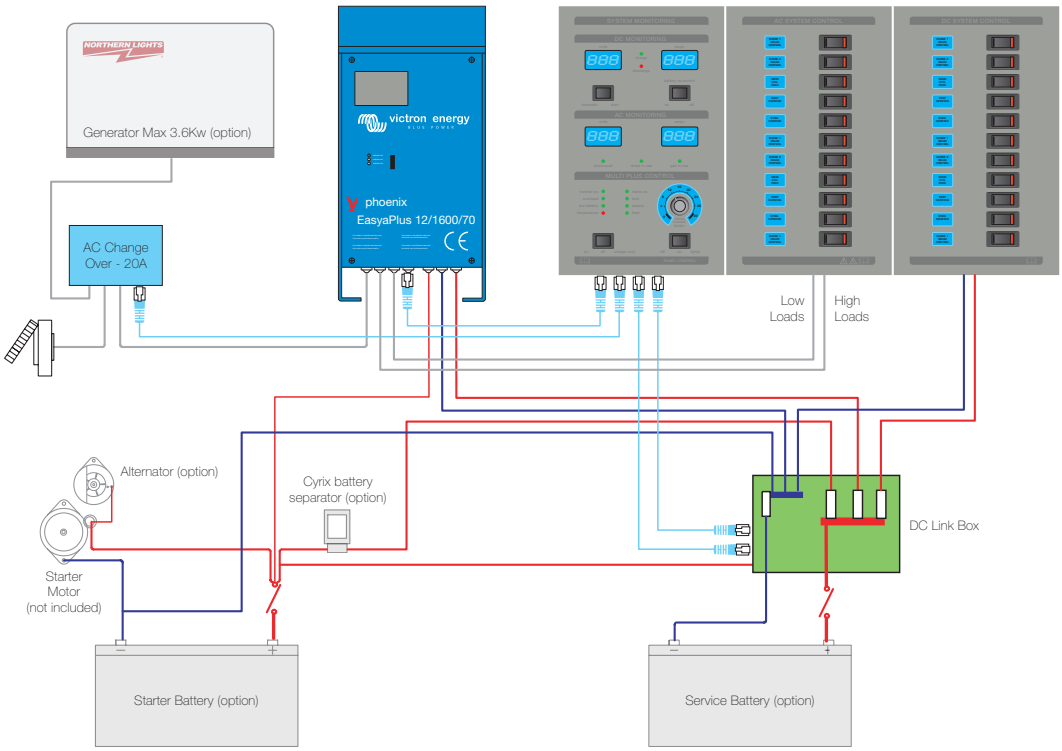

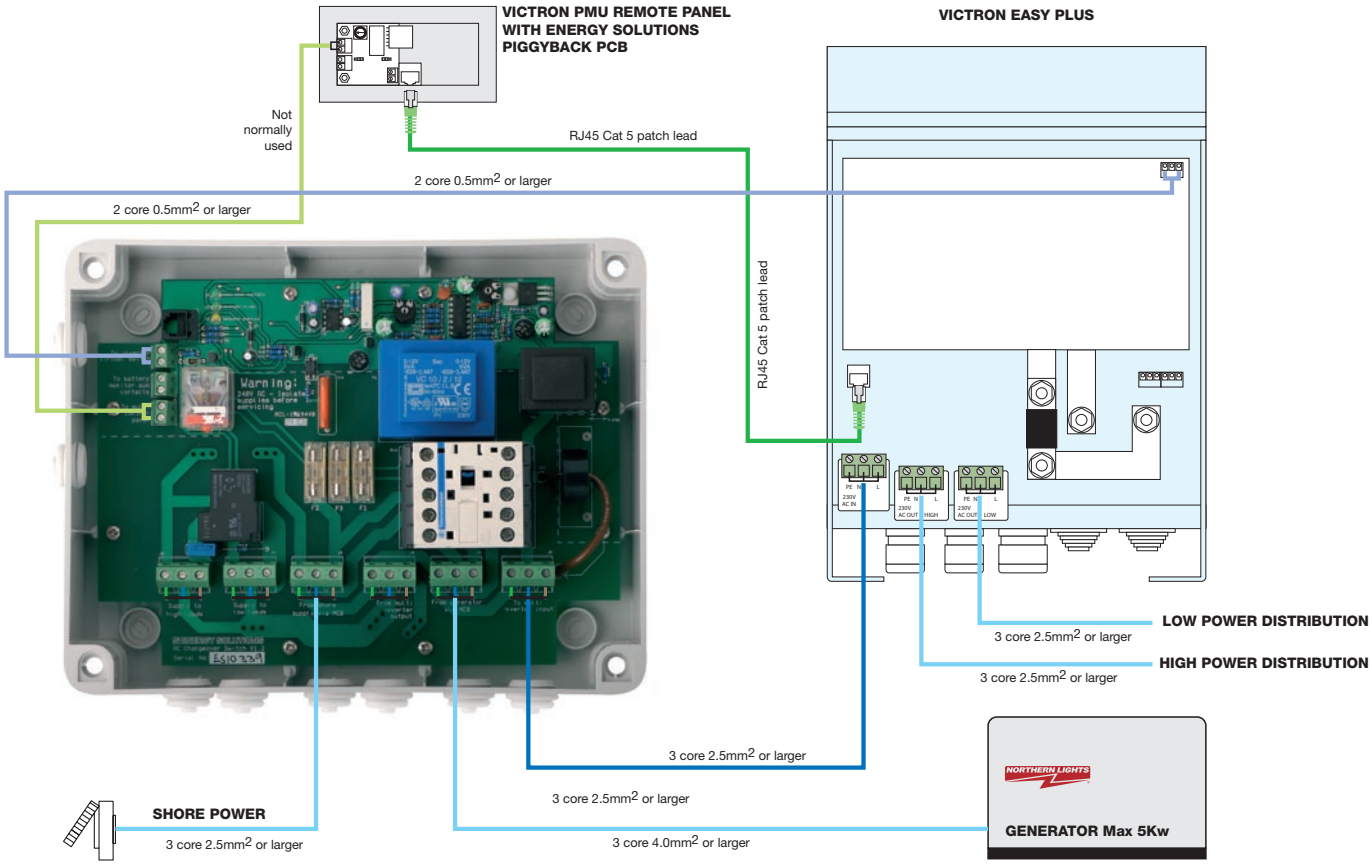
## AC Changeover 20A connection diagram - EasyPlus